TECHNICAL DATA SHEET

GROUND SCREW ROUND FLANGE 2000mm

Art. no.:	**11044**
Weight:	15,00 kg
Materials:	Pipe: 76,1 x 3,6 x 2000 mm Flange: 8 x 200 mm Steel: S235
Surface treatment:	Hot-dip galvanized
Installation:	Electric machine Pneumatic machine Hydraulic machine
Use:	Fixation of beams, columns and profiles
Fixation:	M16 / M12 / M10 bolts

Top view flange

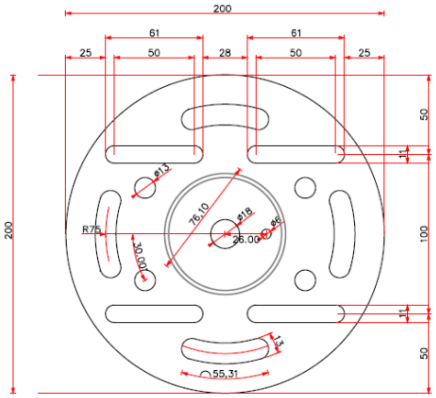

Side view *Cross cut*

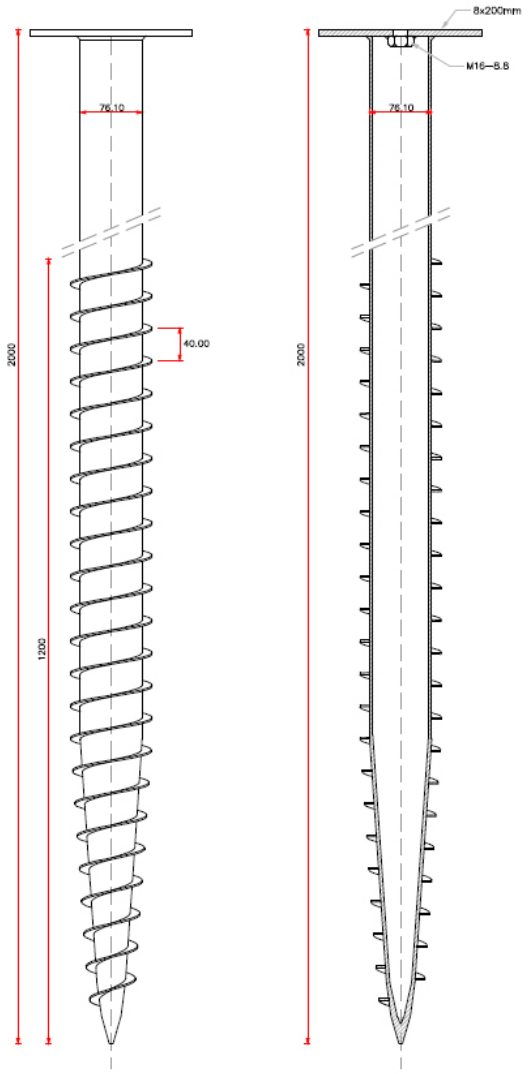

Scale 1:8

To combine with:

17021 – Poleholder M20

17022 – L-Bracket M16 80mm

17023 – L Bracket M16 160mm

17040 – Aluminium plate

Drawing description	Ground screw round flange 2000mm	
Date 12/2018	*Signed* DVDE	*Sheet number* 5 van 5
Drawing number 11044_V1	*Format* A4	*Document status* DEF.

FIRST BASE GROUND SCREWS
Patersweg 2, 5406 XJ
Uden, Holland.

info@firstbasegroundscrews.com
www.firstbasegroundscrews.com
0031 413 432 052